WIDESPREAD
Z831B6

TAG _____

Engineering Specifications: Zurn AquaSpec® Z831B6
Polished chrome-plated widespread with adjustable centers from 6" [152mm] to 20" [508mm], a 5-3/8" [137mm] centerline rigid or swing gooseneck spout and quarter turn ceramic disc cartridges. Unit is furnished with a 2.2 GPM [8.3 L] pressure compensating aerator (complying with ANSI A112.18.1 Standard for flow), 6" [152mm] vandal-resistant color-coded metal wrist blade handles, mounting hardware and 1/2" NPSM coupling nuts for standard lavatory risers. Widespread accommodates installations up to 1-1/8" [29mm] thick.

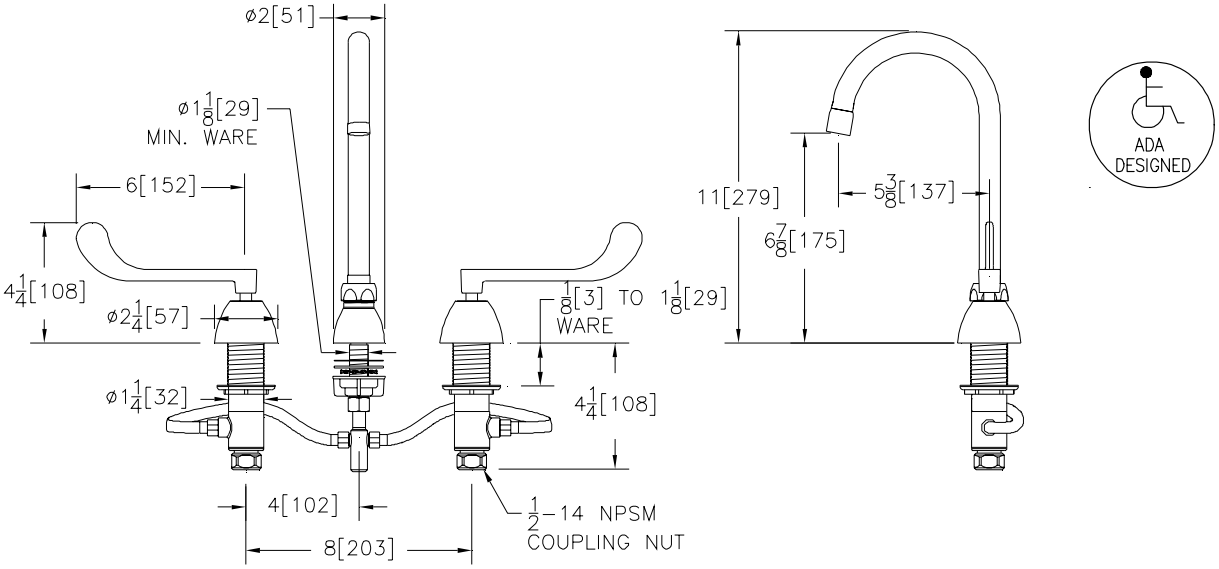

Note: *All dimensions are for reference only. Do not use for pre-plumbing*

OPTIONAL ACCESSORIES

Suffix		Description
☐	-CWO	Cold Water Only
☐	-FC	2.0 GPM [7.6 L] Laminar Flow Control in Base of Spout
☐	-G	1-1/4" [32mm] Grid Strainer Drain
☐	-GH	1-1/4" [32mm] Offset Handicap Grid Drain
☐	-HCT	Hot/Cold Text Indexes
☐	-HS	Hose and Spray
☐	-ICT	Inter-connecting Copper Supply Tubes for 8" In-line Centers
☐	-P	1-1/4" [32mm] Pop-up Drain
☐	-PT	1-1/4"[32mm] Cast Brass P-Trap witha 7-1/2" [191mm] Long 17-Gauge Wall Bend
☐	-TW	Third Waterway
☐	-2F	2.2 GPM [8.3 L] Vandal-Resistant Pressure Compensating Female Aerator
☐	-3F	0.5 GPM [1.9 L] Vandal-Resistant Pressure Compensating Female Spray Outlet
☐	-4F	2.2 GPM [8.3 L] Vandal-Resistant Pressure Compensating Female Laminar Flow Outlet
☐	-5F	2.0 GPM [7.6 L] Female Spray Outlet
☐	-7F	1.0 GPM [3.8L] Pressure Compensating Female Spray Outlet
☐	-16F	1.0 GPM [3.8L] Vandal-Resistant Pressure Compensating Female Spray Outlet
☐	-17F	1.5 GPM [5.7L] Vandal-Resistant Pressure Compensating Female Aerator
☐	-18F	1.5 GPM [5.7L] Vandal-Resistant Pressure Compensating Female Laminar Flow Outlet
☐	-19F	1.5 GPM [5.7 L] Anti-Microbial Pressure Compensating Female Laminar Flow Outlet
☐	-20F	1.0 GPM [3.8L] Vandal-Resistant Pressure Compensating Anti-Microbial Female Laminar Flow Outlet
☐	-21F	1.0 GPM [3.8L] Female Laminar Flow Outlet
☐	-22F	1.0 GPM [3.8L] Vandal-Resistant Female Laminar Flow Outlet

ZURN INDUSTRIES, LLC ♦ COMMERCIAL BRASS OPERATION ♦ 2640 SOUTH WORK STREET ♦ FALCONER NY 14733
Phone: 1-716-665-1132 ♦ Fax: 1-716-665-1135 ♦ World Wide Web: www.zurn.com
In Canada: ZURN INDUSTRIES LIMITED ♦ 3544 Nashua Drive ♦ Mississauga, Ontario L4V1L2 ♦ Phone: 905/405-8272 Fax: 905/405-1292

AquaSpec® is a registered trademark of Zurn Industries, LLC
©2008 Zurn Industries, LLC

Rev. H Date: 8/16/08 C.N. No. 107291
Dwg. No. 60792 Product No. Z831B6