KITCHEN SINK FAUCET
Z871C2

TAG _____

Engineering Specifications: Zurn AquaSpec® Z871C2
Polished chrome-plated 8" [203mm] brass deck faucet with an 8" [203mm] centerline rigid or swing gooseneck spout and quarter turn ceramic disc cartridges. Unit is furnished with a 2.2 GPM [8.3 L] pressure compensating aerator (complying with ANSI A112.18.1 Standard for flow), a vandal-resistant color-coded metal four arm handles, mounting hardware and 1/2" NPSM coupling nuts for standard lavatory risers.

ADA DESIGNED

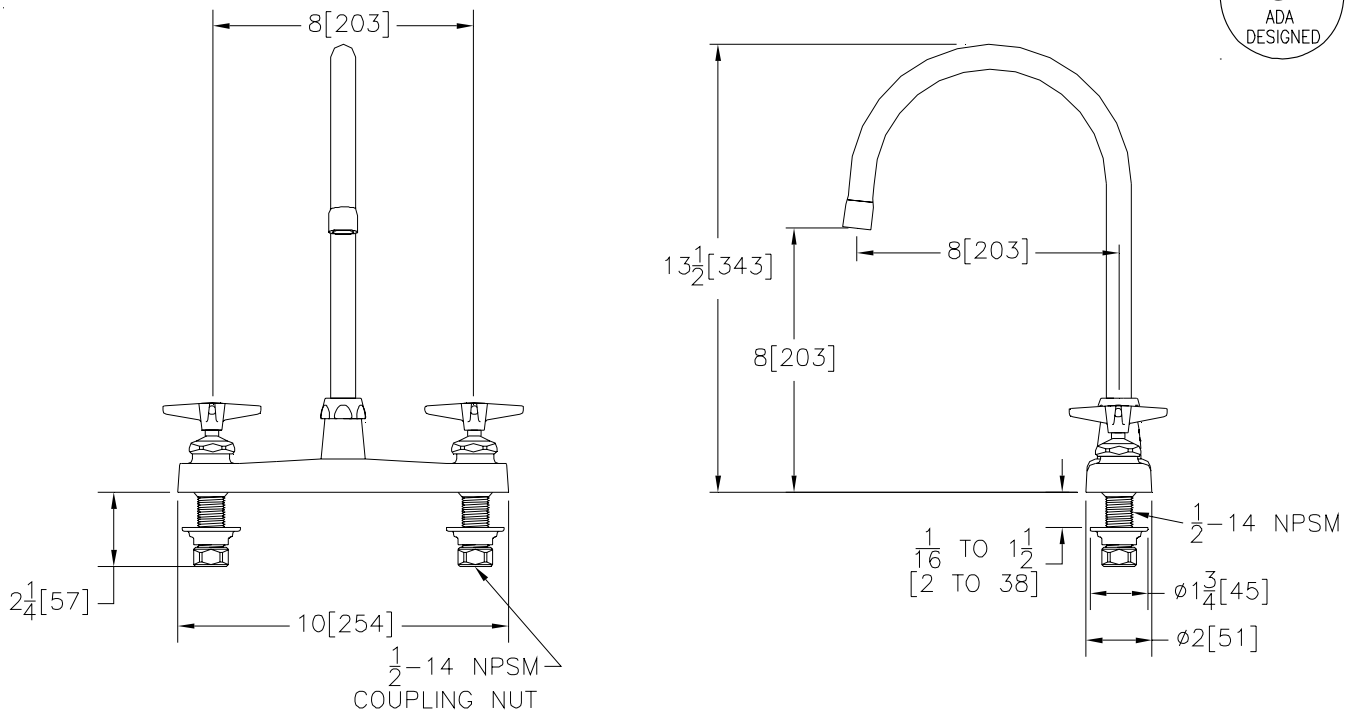

Note: *All dimensions are for reference only. Do not use for pre-plumbing*

OPTIONAL ACCESSORIES

Suffix	Description
___ -FC	2.0 GPM [7.6 L] Laminar Flow Control in Base of Spout
___ -HCT	Hot/Cold Text Indexes
___ -HS	Hose and Spray
___ -PT	1-1/4" [32mm] Cast Brass P-Trap with a 7-1/2" [191mm] Long 17-Gauge Wall Bend
___ -2F	2.2 GPM [8.3 L] Vandal-Resistant Pressure Compensating Female Aerator
___ -3F	0.5 GPM [1.9 L] Vandal-Resistant Pressure Compensating Female Aerator
___ -4F	2.2 GPM [8.3 L] Vandal-Resistant Pressure Compensating Female Laminar Flow
___ -7F	1.0 GPM [3.8 L] Pressure Compensating Female Spray Outlet
___ -16F	1.0 GPM [3.8 L] Vandal-Resistant Pressure Compensating Female Spray Outlet
___ -17F	1.5 GPM [5.7 L] Vandal-Resistant Pressure Compensating Female Aerator
___ -18F	1.5 GPM [5.7 L] Vandal-Resistant Pressure Compensating Female Laminar Flow

ZURN INDUSTRIES, INC. ♦ COMMERCIAL BRASS OPERATION ♦2640 SOUTH WORK STREET ♦ FALCONER NY 14733
Phone: 1-716-665-1132 ♦ Fax: 1-716-665-1135 ♦ World Wide Web: www.zurn.com
In Canada: ZURN INDUSTRIES LIMITED ♦ 3544 Nashua Drive ♦ Mississauga, Ontario L4V1L2 ♦ Phone: 905/405-8272 Fax: 905/405-1292

AquaSpec® is a registered trademark of Zurn Industries, Inc.
©2006 Zurn Industries, Inc.

Rev. A Date: 7/21/06 C.N. No. 104672
Dwg. No. 65774 Product No. Z871C2