RETRACTABLE HOSE REEL

Z89000-PR1

TAG _____

Engineering Specification: Zurn AquaSpec® Z89000-PR1
Retractable hose reel with 35' [10.7m] of 3/8" I.D. rubber hose. Unit is furnished with a hose bumper, a hose bend restrictor and a self-closing 1.24 GPM @ 60 psi (4.7 L/min. @ 400 kPa) pre-rinse valve with an insulated handle, a stay open clip and a rubber bumper spray head. Unit has a 3/8" female inlet on reel.

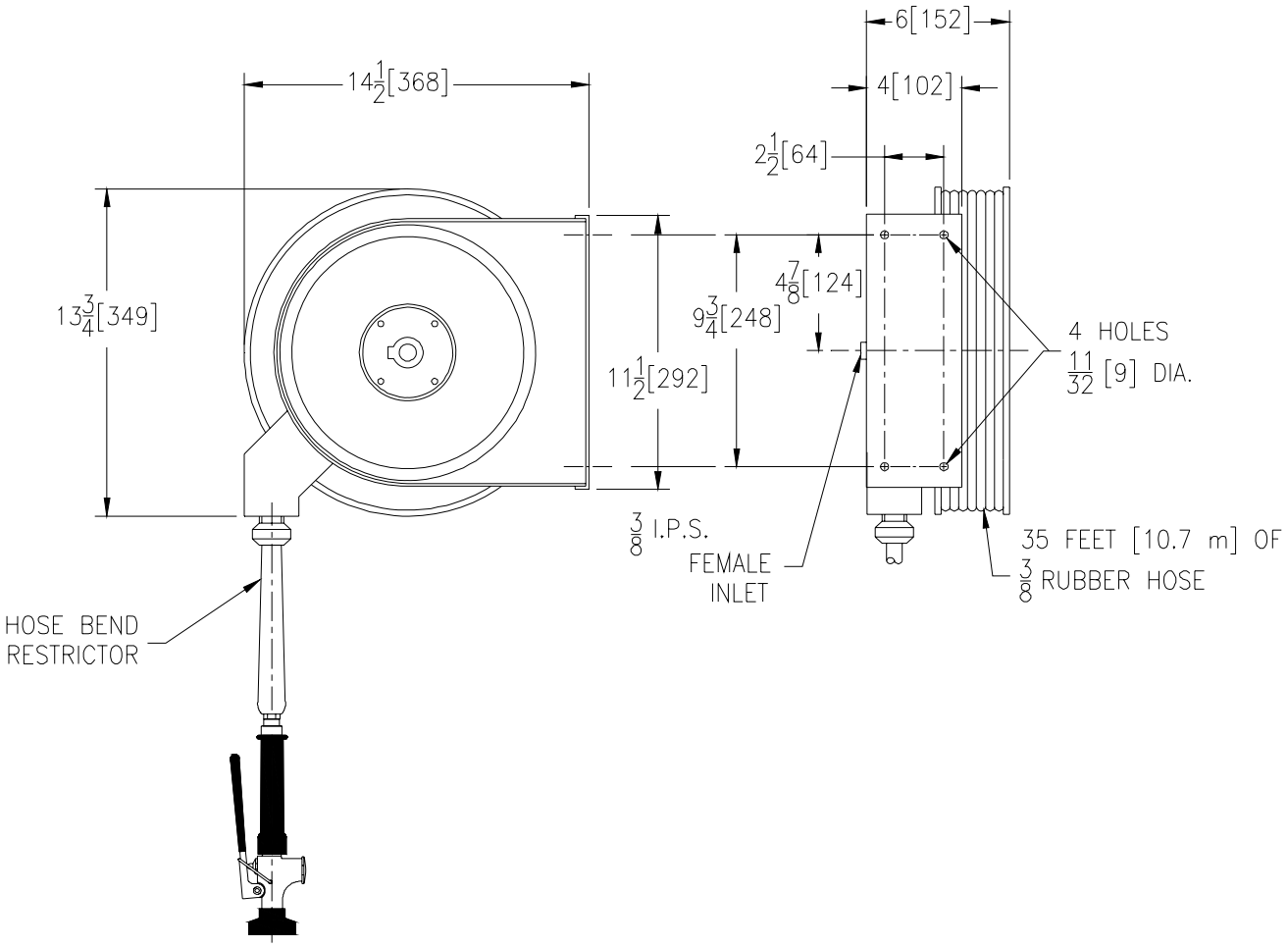

Note: *All dimensions are for reference only. Do not use for pre-plumbing*

OPTIONAL ACCESSORIES

Suffix	Description
__ -PR2	Angled Pre-rinse Spray Head
__ -PR3	Angled Aerated Pre-rinse Spray Head
__ -PR6	Self-Closing Pre-Rinse Valve, Straight Nozzle with Diffuser
__ -ENC	Housing Cover
__ -EVB	Elevated Vacuum Breaker
__ -SS	Stainless Steel Housing

ZURN INDUSTRIES, LLC ♦ COMMERCIAL BRASS OPERATION ♦ 2640 SOUTH WORK STREET ♦ FALCONER NY 14733
Phone: 1-716-665-1132 ♦ Fax: 1-716-665-1135 ♦ World Wide Web: www.zurn.com
In Canada: ZURN INDUSTRIES LIMITED ♦ 3544 Nashua Drive ♦ Mississauga, Ontario L4V1L2 ♦ Phone: 905/405-8272 Fax: 905/405-1292

AquaSpec® is a registered trademark of Zurn Industries, LLC
©2008 Zurn Industries, LLC

Rev. J Date: 6/26/09 C.N. No. 125006
Dwg. No. 62156 Product No. Z89000-PR1